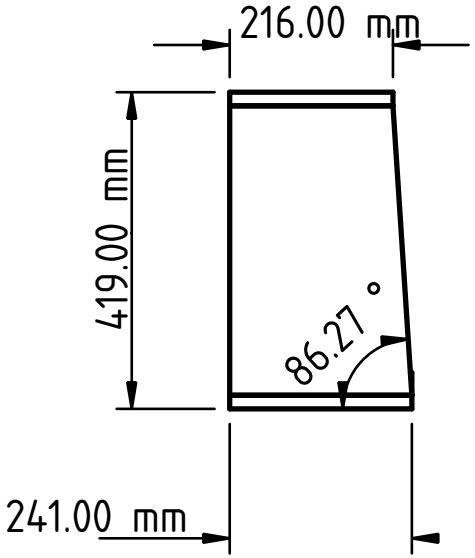
216.00 mm
419.00 mm
86.27 °
241.00 mm

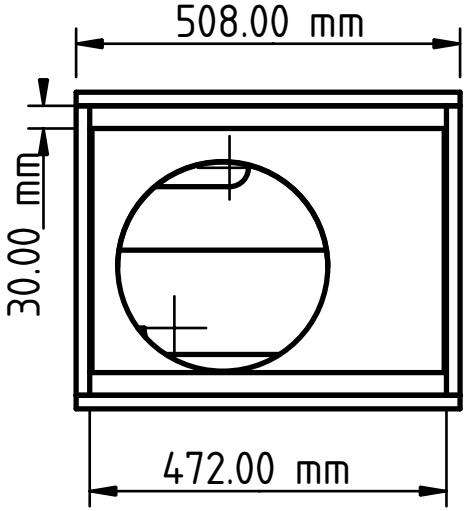
508.00 mm
30.00 mm
472.00 mm

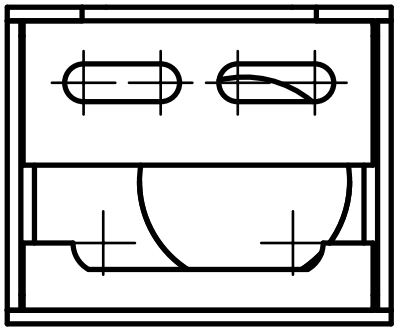

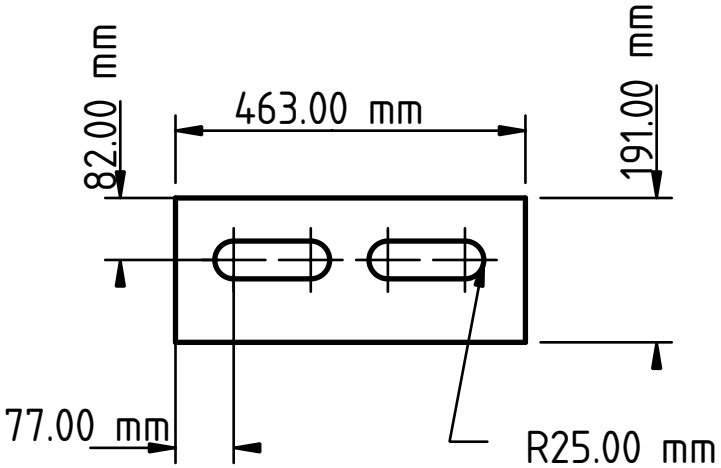
82.00 mm
463.00 mm
191.00 mm
77.00 mm
R25.00 mm

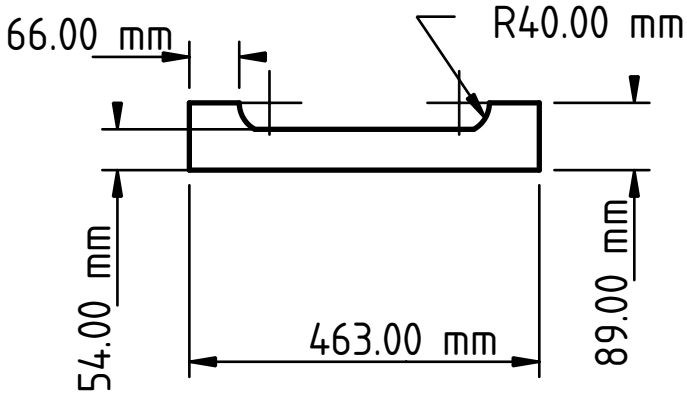
66.00 mm
R40.00 mm
54.00 mm
463.00 mm
89.00 mm

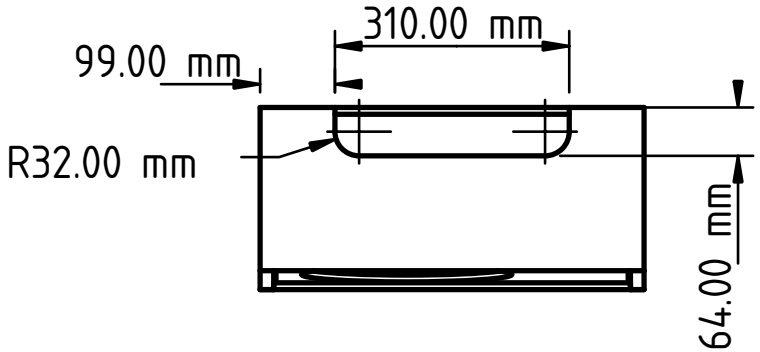
310.00 mm
99.00 mm
R32.00 mm
64.00 mm

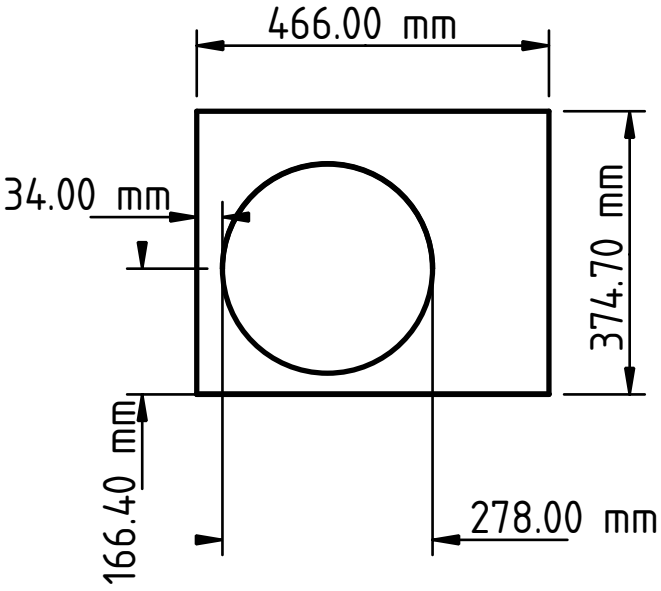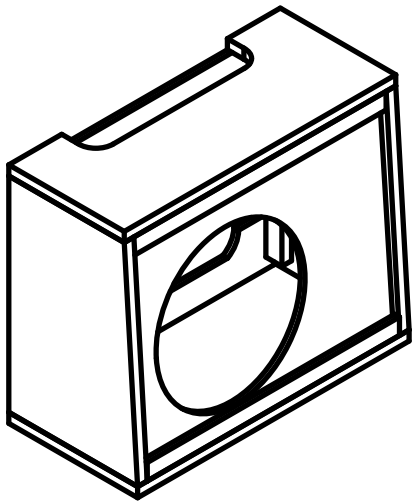
466.00 mm
34.00 mm
374.70 mm
166.40 mm
278.00 mm