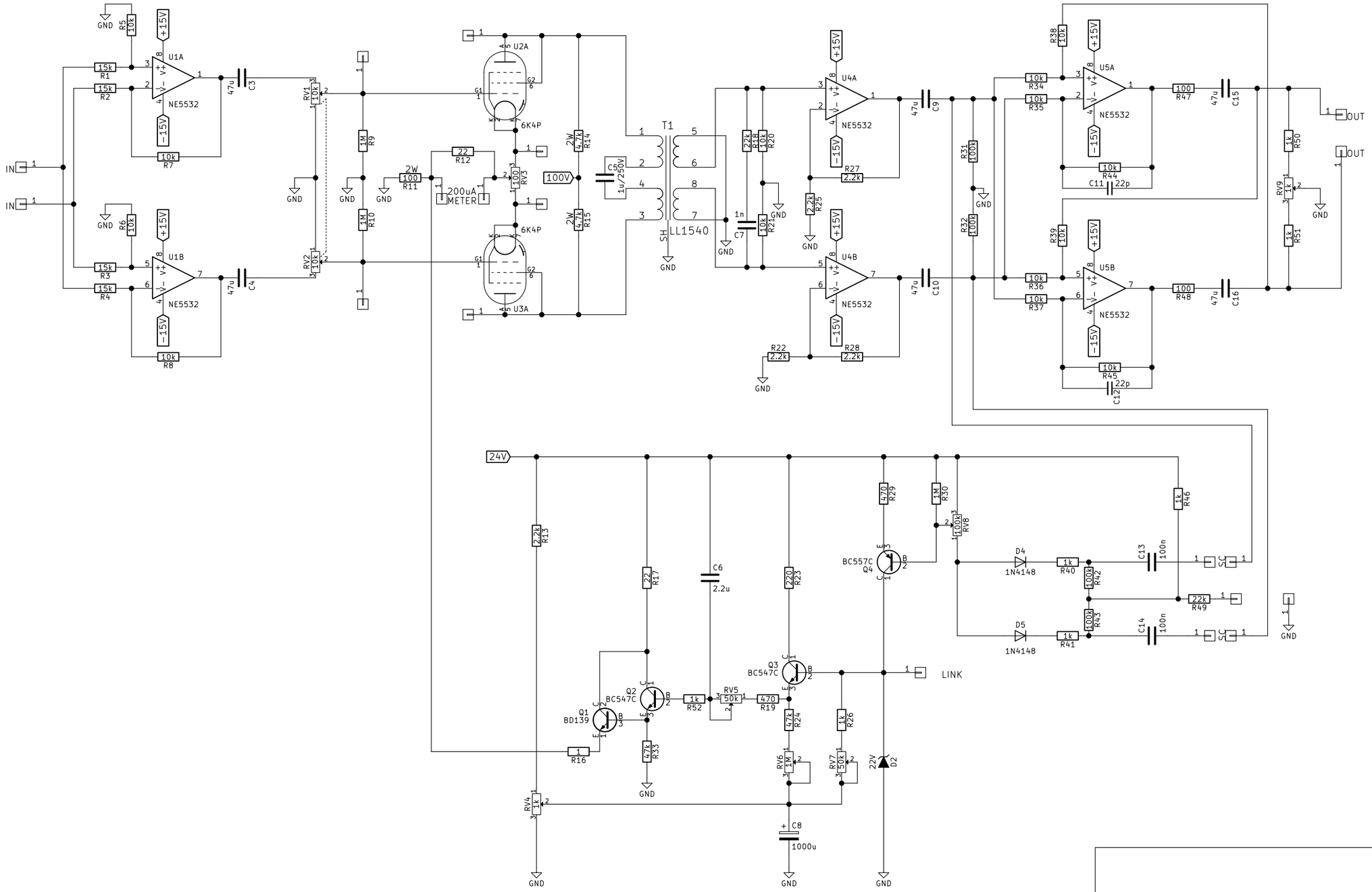

Heikki Vuojolahti

Sheet: /

File: variablemuschematic.sch

Title: VARI-MU COMPRESSOR

Size: A3	Date: 2017-05-07	**Rev:**
KiCad E.D.A. eeschema 4.0.5+dfsg1-4		Id: 1/1