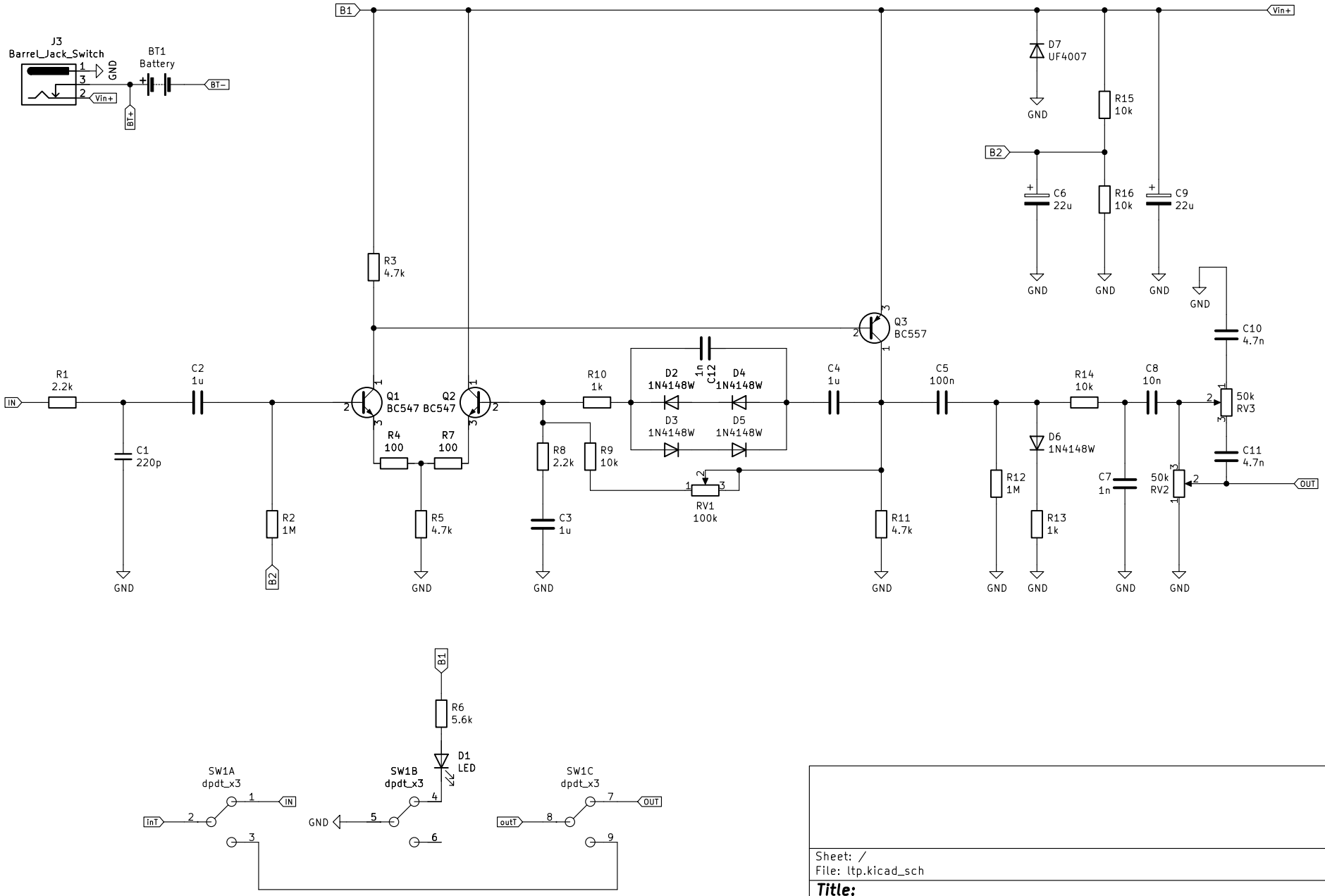

Sheet: /
File: ltp.kicad_sch

Title:

Size: A4	Date:	Rev:
KiCad E.D.A. eeschema 6.0.8+dfsg−1		Id: 1/1