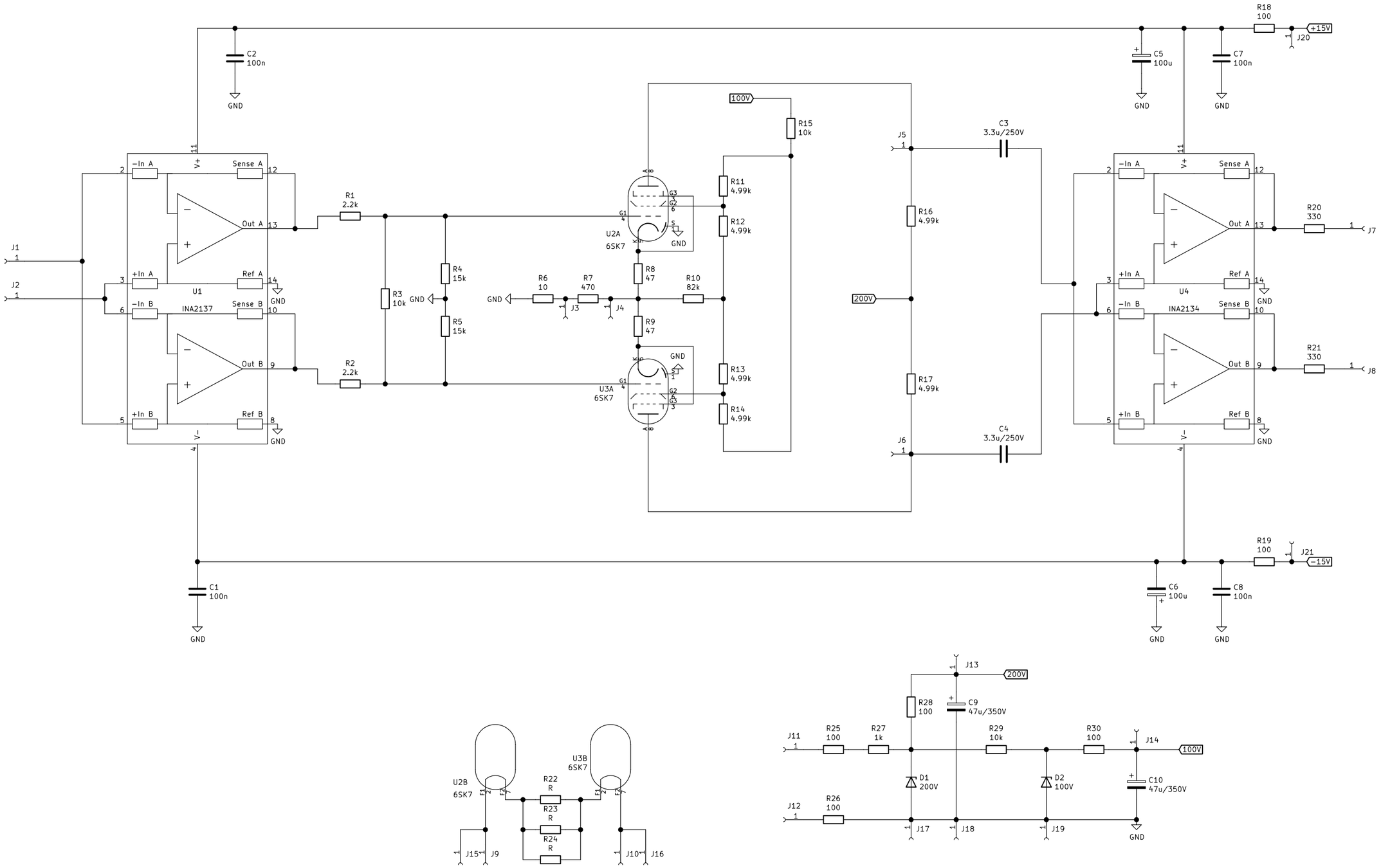

www.ghr.fi

Sheet: /

File: putkisovitin.sch

Title:

Size: A3	Date:	Rev:
KiCad E.D.A. kicad 5.99.0+really5.1.12+dfsg1−1		Id: 1/1